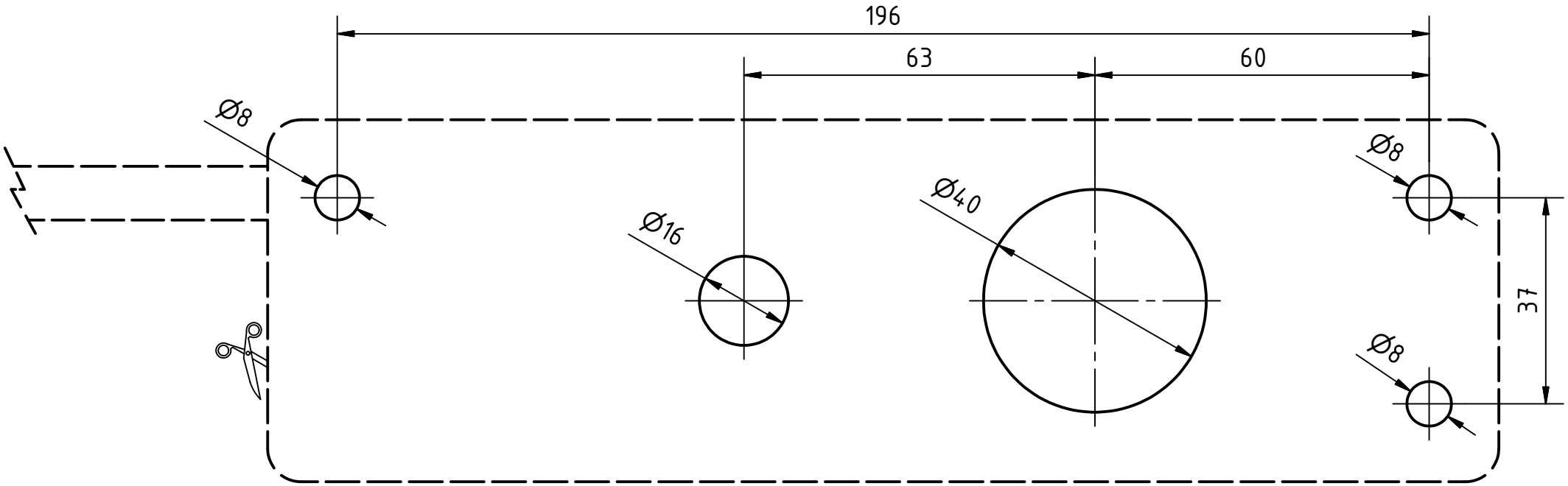

Boorpatroon
Drillpattern
Bohr-schablone
Moule de perceuse

Binnen/Inside/Innen/Interior